This Exploded Drawing is for Informational Purposes Only. No Technical Support or Installation Instructions are Available. If you do not see the part you are looking for on our website, please email partsrequest@smallappliance.com for assistance.

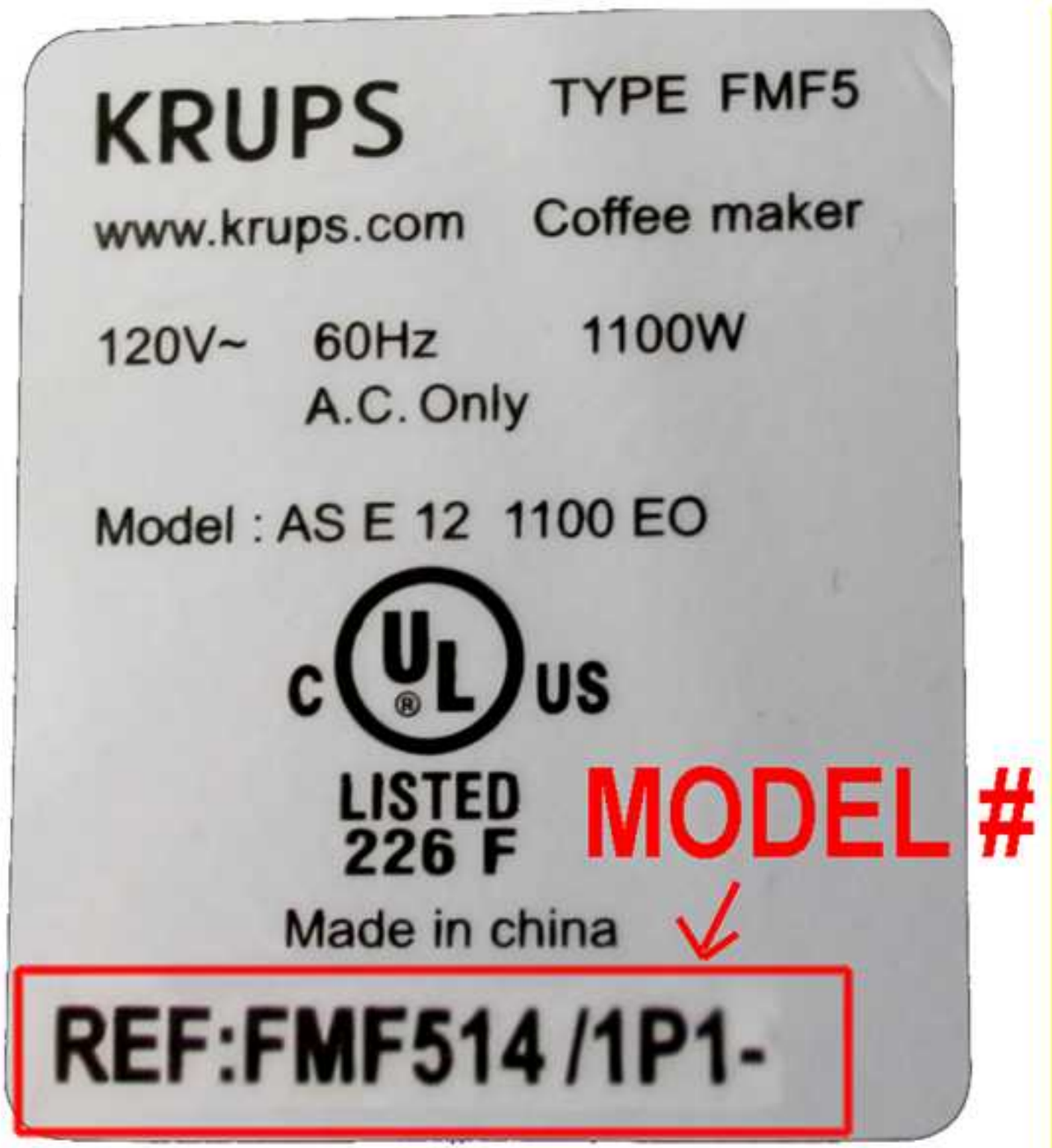

THERE ARE MULTIPLE VERSIONS OF THIS MODEL.

VERIFY THE *REF:* NUMBER ON YOUR MACHINE AND SCROLL TO THE CORRECT PAGE

This Exploded Drawing is for Informational Purposes Only. No Technical Support or Installation Instructions are Available.
If you do not see the part you are looking for on our website, please email partsrequest@smallappliance.com for assistance.

KRUPS

COFFEE MAKER
AROMA CONTROL THERM PROGRAMM

FMC2LL(0) / (120V-127V)

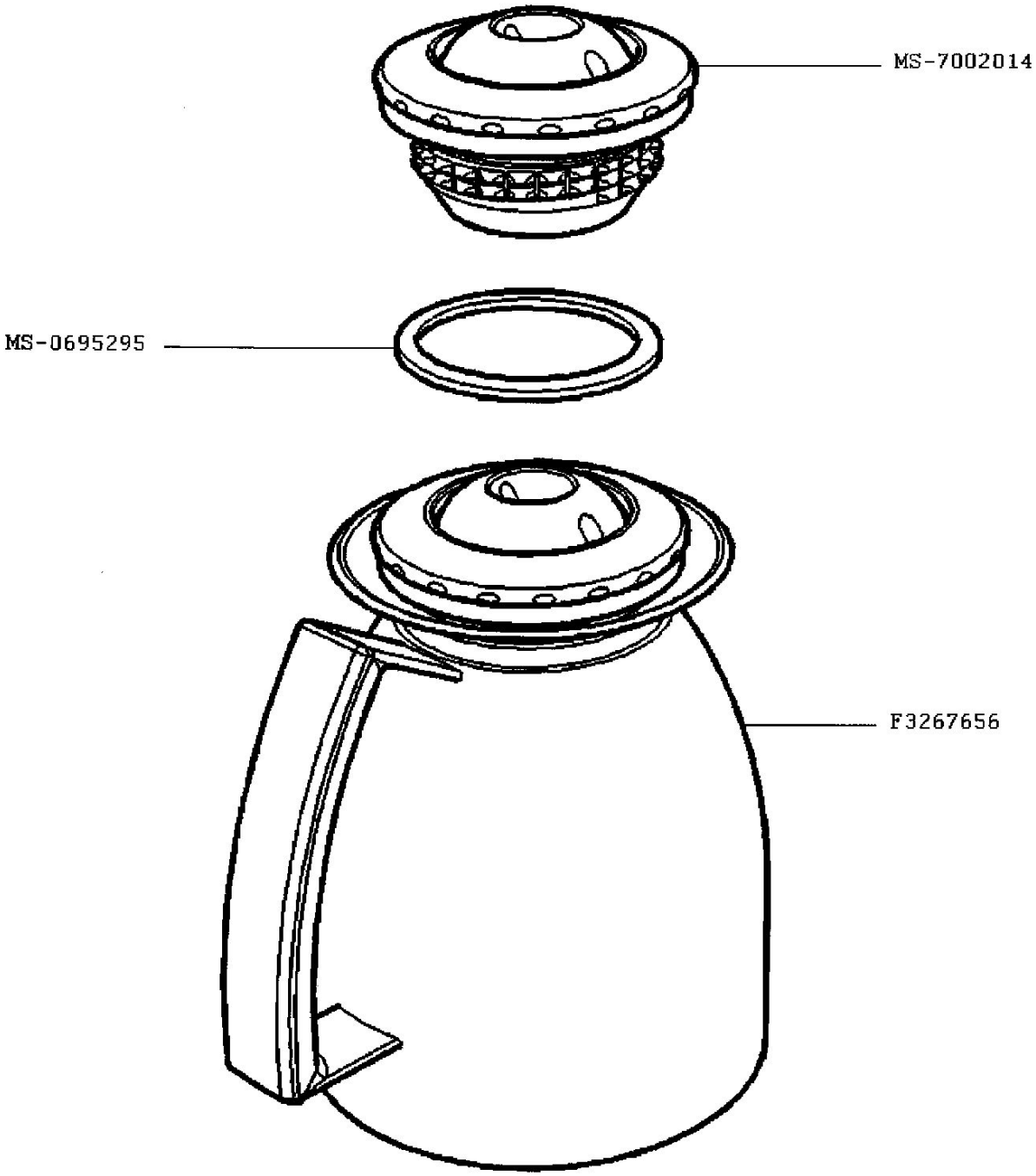

CREATION EDIT 12/1/2003	PAGE 1/2	COUNTRY US	FAMILY II

This Exploded Drawing is for Informational Purposes Only. No Technical Support or Installation Instructions are Available.
If you do not see the part you are looking for on our website, please email partsrequest@smallappliance.com for assistance.

KRUPS

COFFEE MAKER
AROMA CONTROL THERM PROGRAMM

FMC2LL(0) (120V-127V)

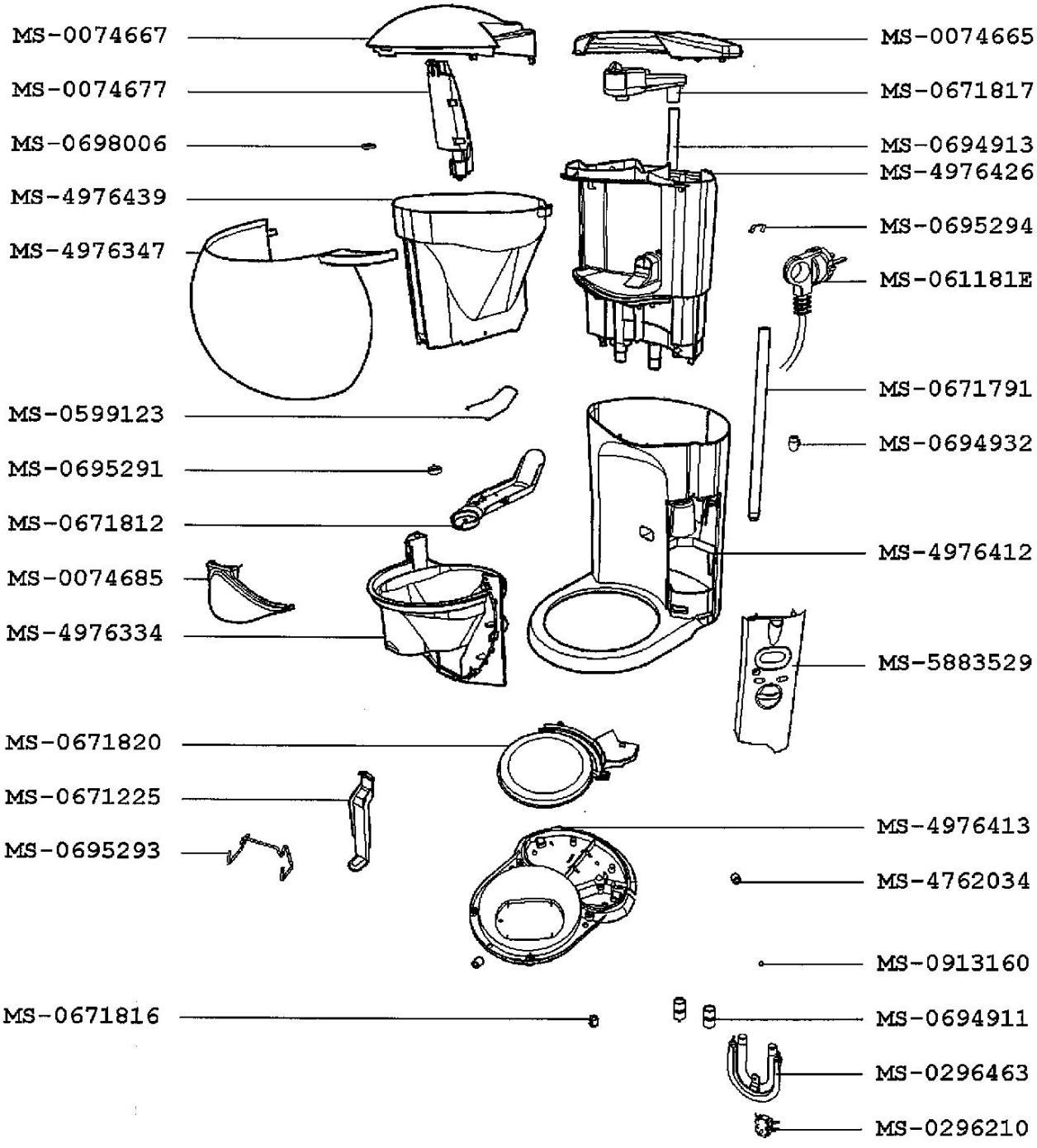

CREATION		PAGE	COUNTRY	FAMILY
EDIT	12/1/2003	2/2	US	II

This Exploded Drawing is for Informational Purposes Only. No Technical Support or Installation Instructions are Available.
If you do not see the part you are looking for on our website, please email partsrequest@smallappliance.com for assistance.

KRUPS

COFFEE MAKER
AROMA CONTROL THERM PROGRAMM

FMC2MM(0) (120V-127V)

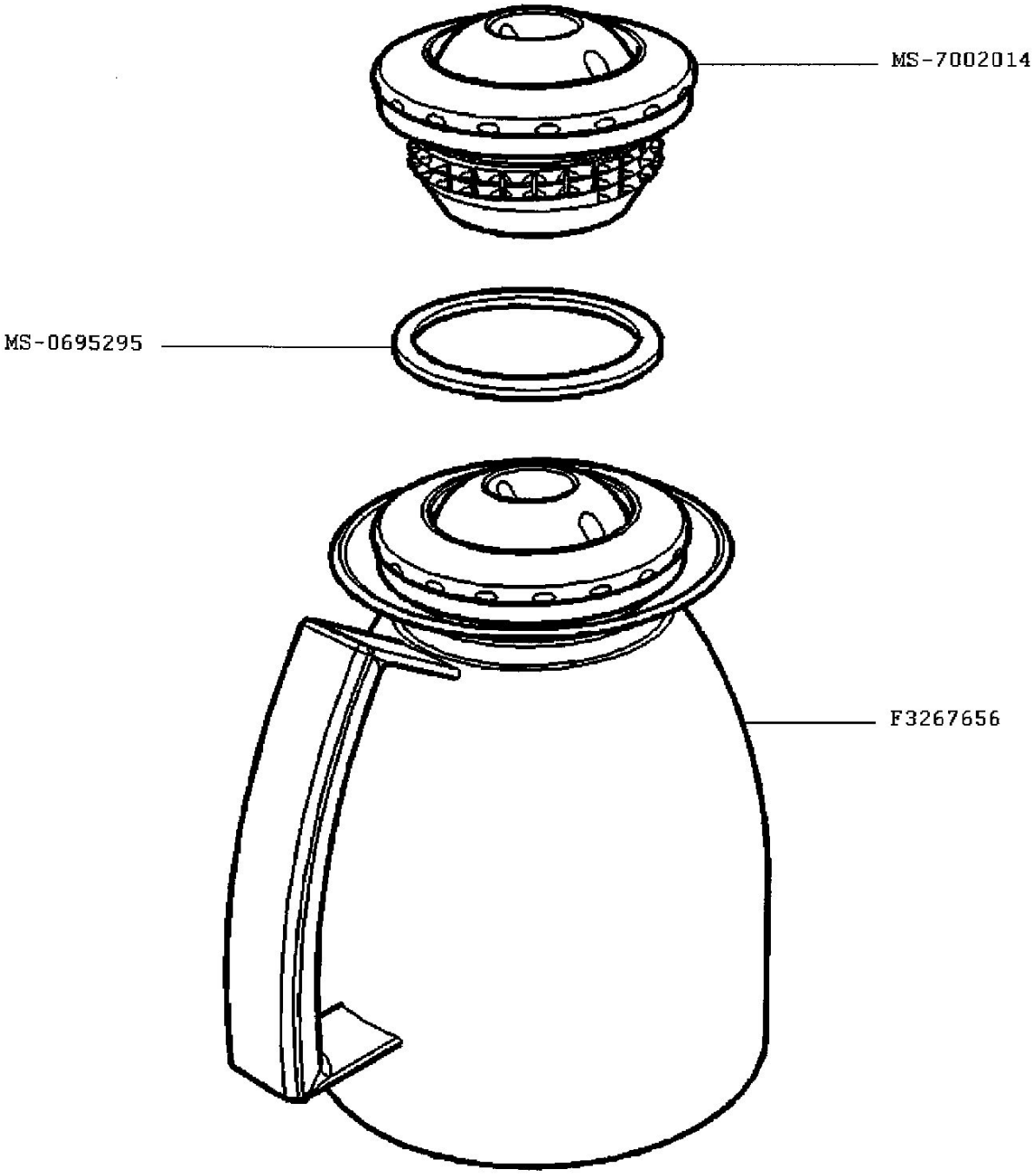

CREATION		PAGE	COUNTRY	FAMILY
EDIT	12/1/2003	1/2	US	II

This Exploded Drawing is for Informational Purposes Only. No Technical Support or Installation Instructions are Available.
If you do not see the part you are looking for on our website, please email partsrequest@smallappliance.com for assistance.

KRUPS

COFFEE MAKER
AROMA CONTROL THERM PROGRAMM

FMC2MM(0) (120V-127V)

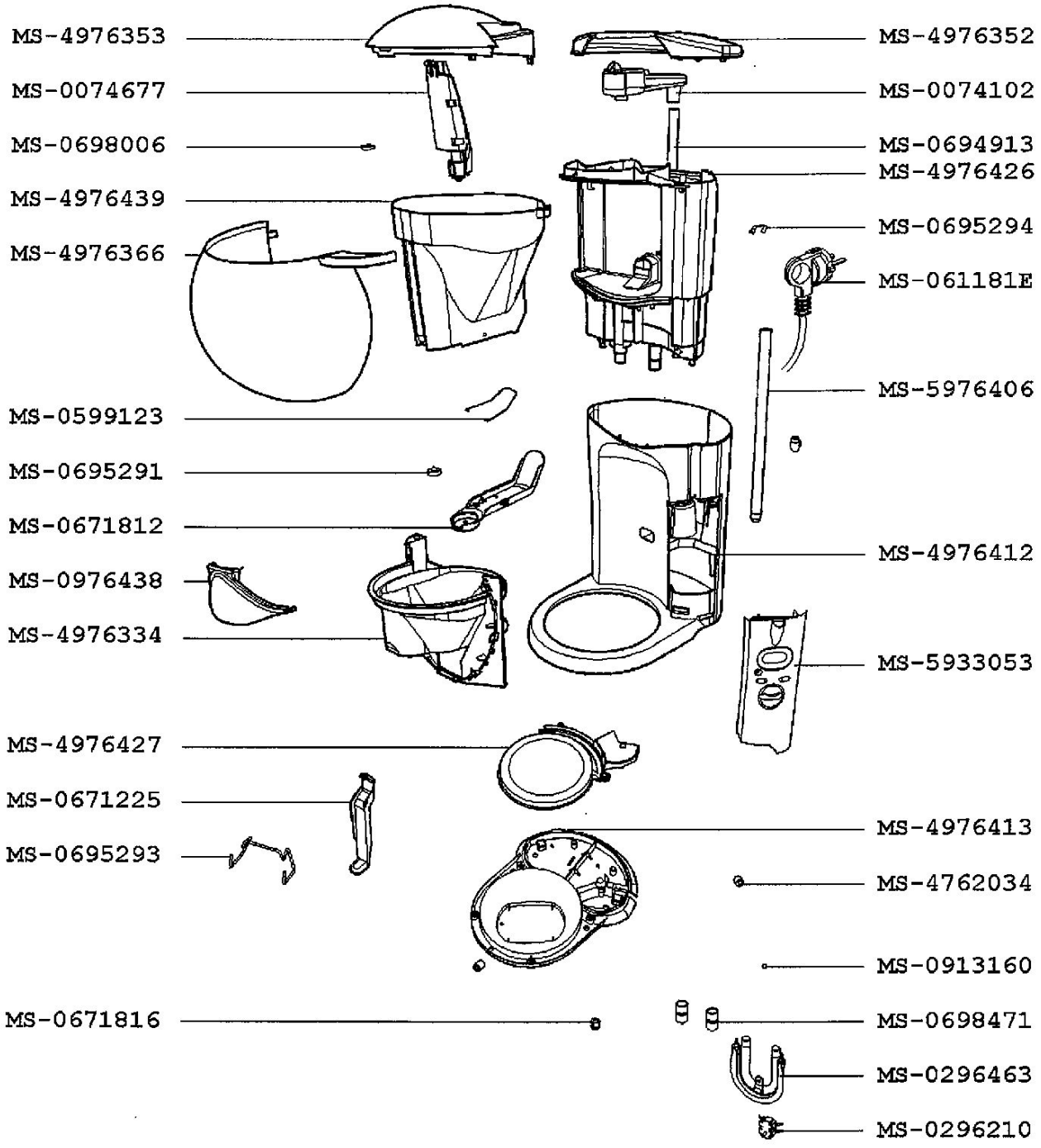

CREATION		PAGE	COUNTRY	FAMILY
EDIT	12/1/2003	2/2	US	II