This Exploded Drawing is for Informational Purposes Only. No Technical Support or Installation Instructions are Available.
If you do not see the part you are looking for on our website, please email partsrequest@smallappliance.com for assistance.

KRUPS

EXPRESSO MAKER
EXPRESSERIA AUTOMATIC

XP900050

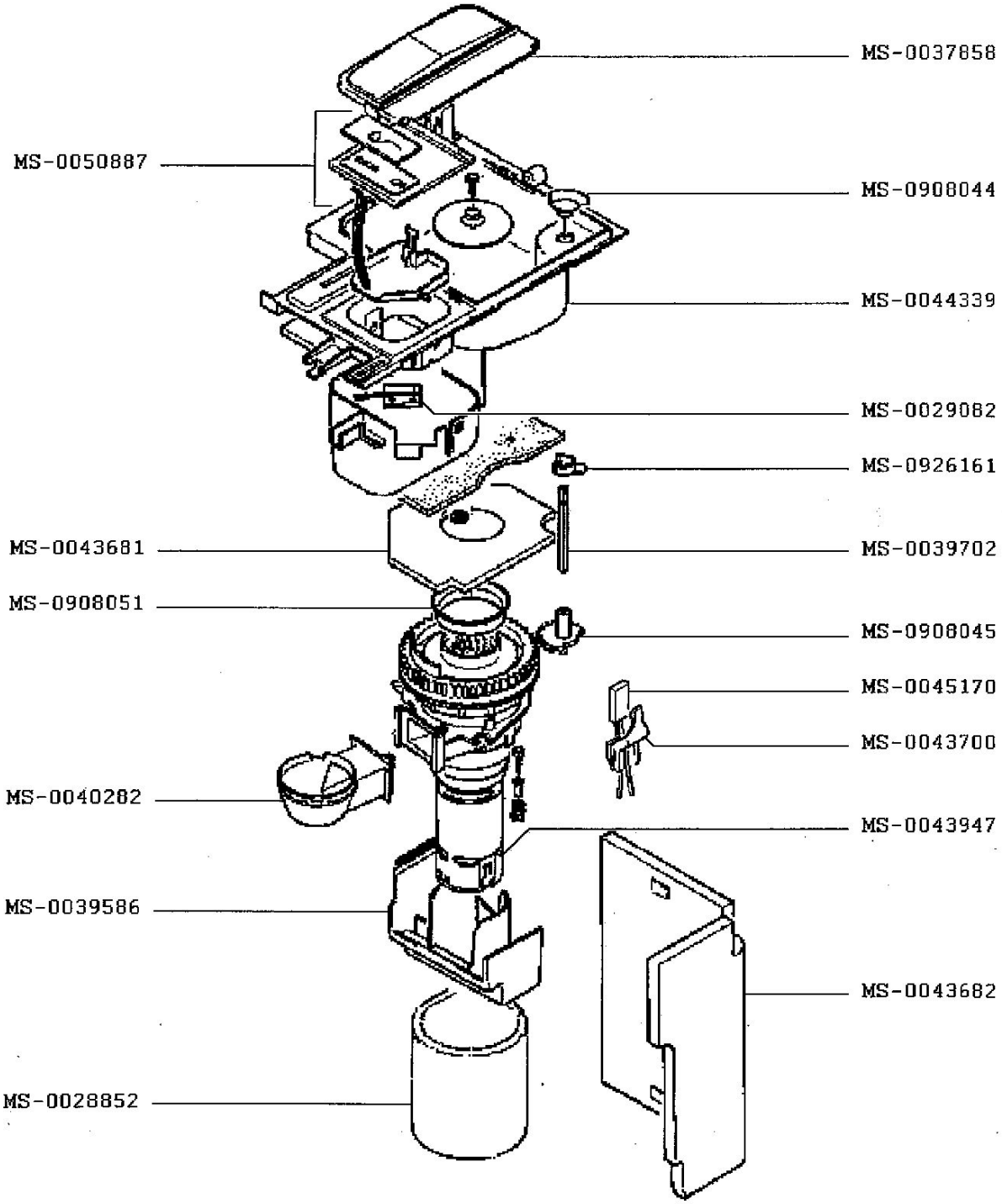

CREATION	7/2/2007	PAGE	COUNTRY	FAMILY
EDIT	7/7/2008	1/8	US	II

This Exploded Drawing is for Informational Purposes Only. No Technical Support or Installation Instructions are Available.
If you do not see the part you are looking for on our website, please email partsrequest@smallappliance.com for assistance.

KRUPS

EXPRESSO MAKER
EXPRESSERIA AUTOMATIC

XP900050

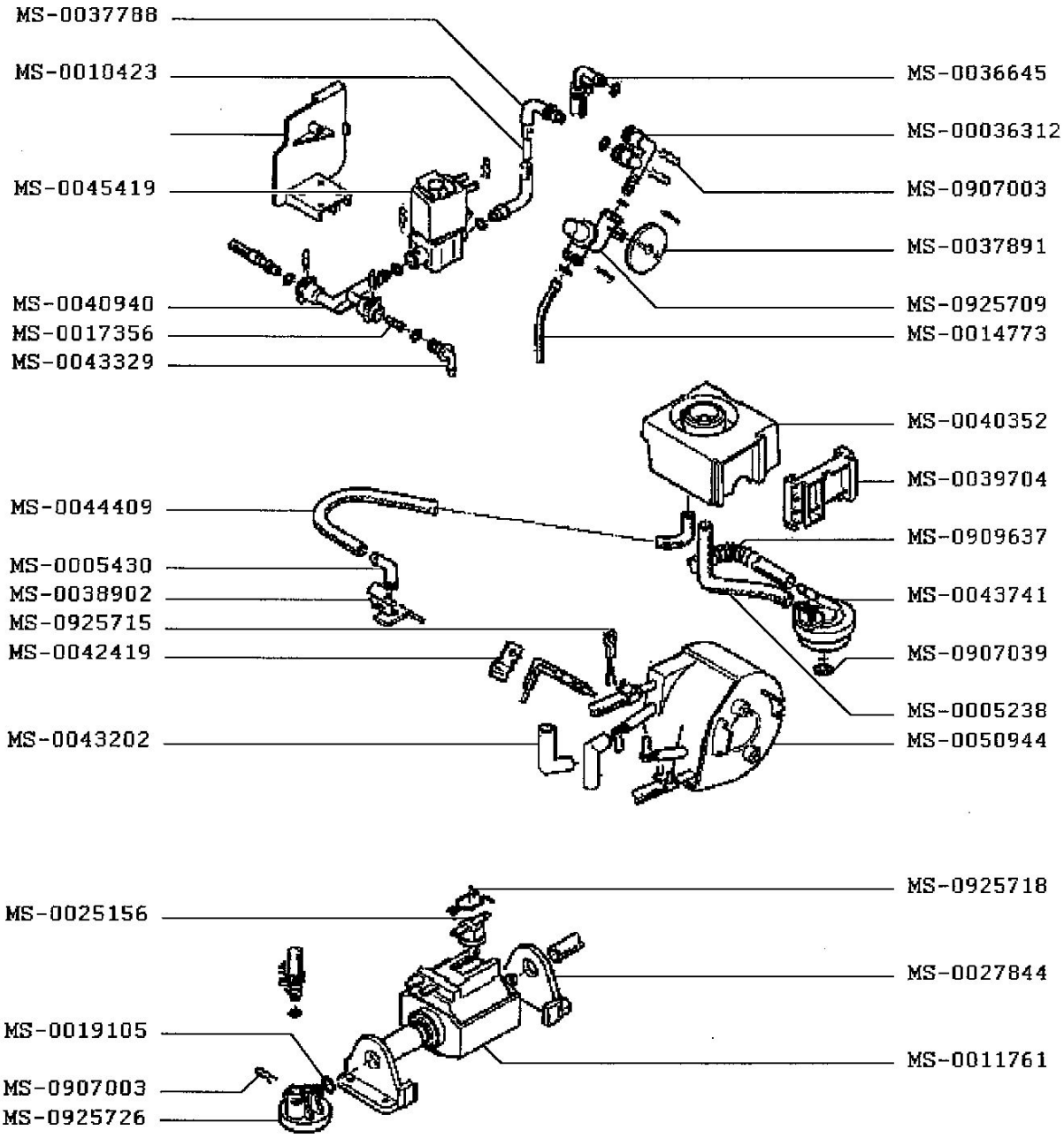

CREATION	7/2/2007	PAGE	COUNTRY	FAMILY
EDIT	7/7/2008	2/8	US	II

This Exploded Drawing is for Informational Purposes Only. No Technical Support or Installation Instructions are Available.
If you do not see the part you are looking for on our website, please email partsrequest@smallappliance.com for assistance.

KRUPS

EXPRESSO MAKER
EXPRESSERIA AUTOMATIC

XP900050

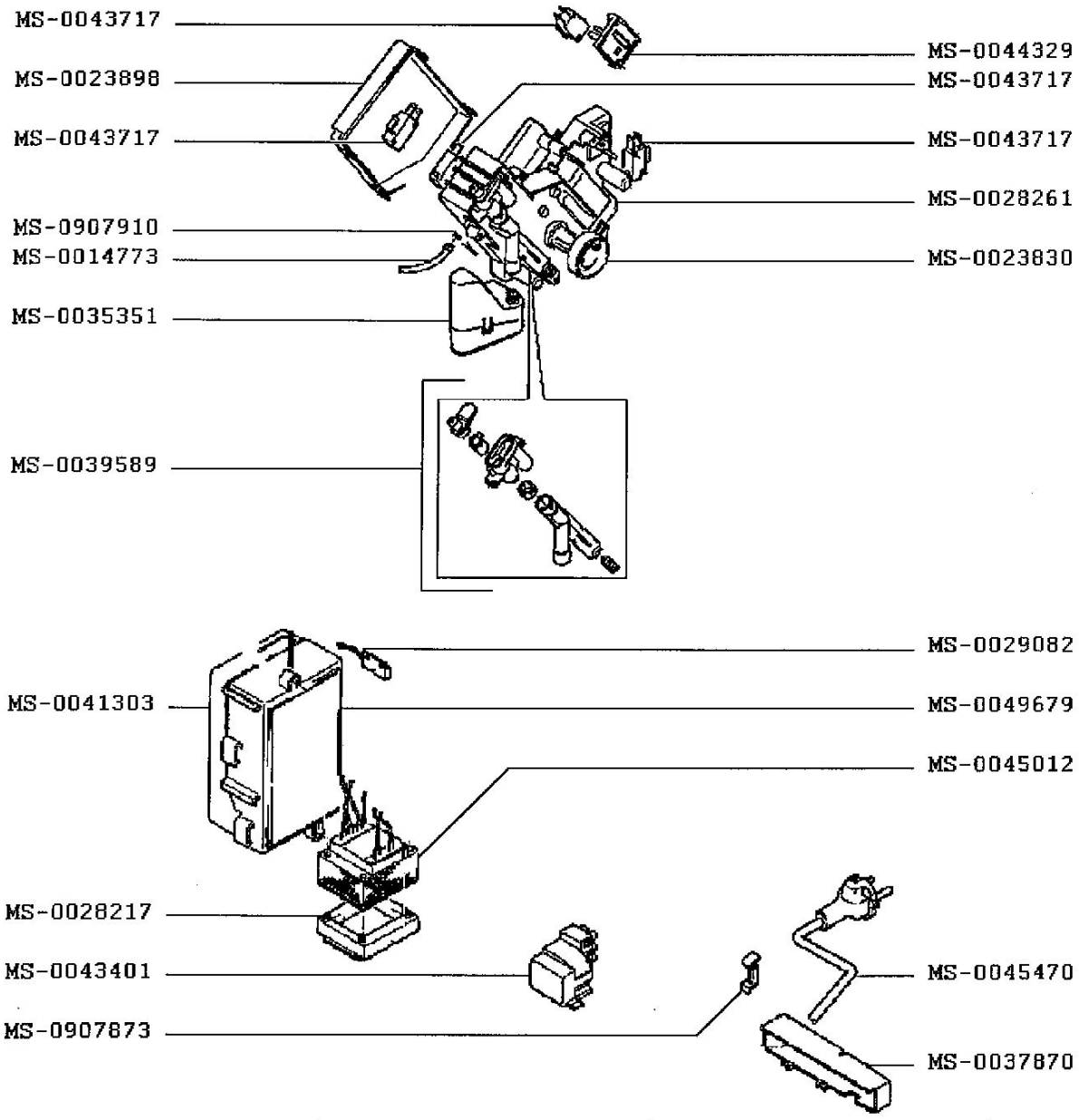

CREATION	7/2/2007	PAGE	COUNTRY	FAMILY
EDIT	7/7/2008	3/8	US	II

This Exploded Drawing is for Informational Purposes Only. No Technical Support or Installation Instructions are Available.
If you do not see the part you are looking for on our website, please email partsrequest@smallappliance.com for assistance.

KRUPS

EXPRESSO MAKER
EXPRESSERIA AUTOMATIC

XP900050

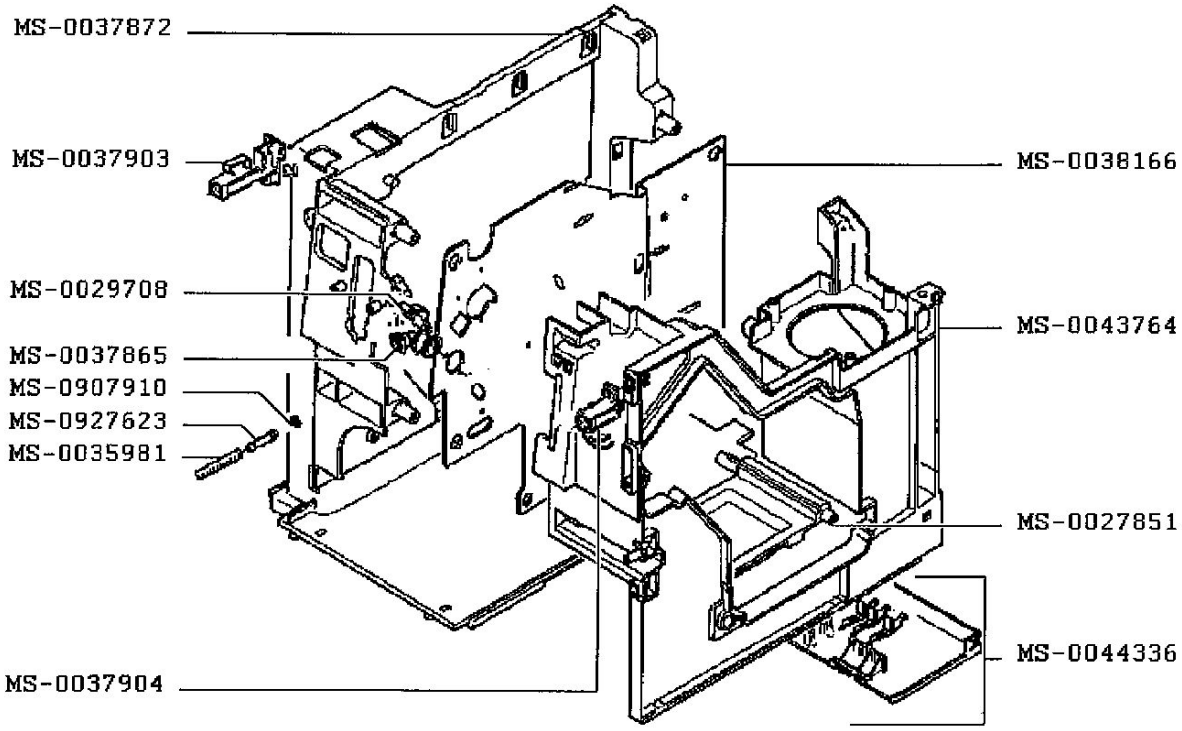

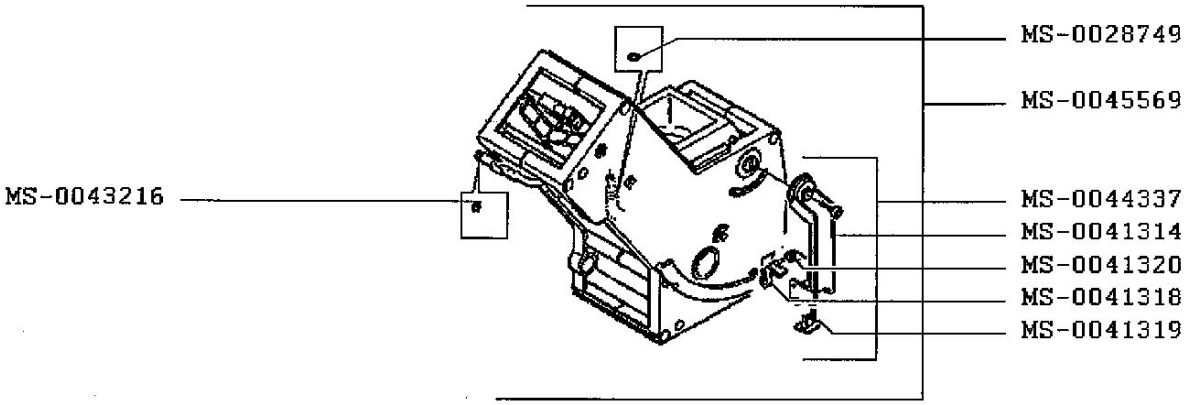

CREATION	7/2/2007	PAGE	COUNTRY	FAMILY
EDIT	7/7/2008	4/8	US	II

This Exploded Drawing is for Informational Purposes Only. No Technical Support or Installation Instructions are Available.
If you do not see the part you are looking for on our website, please email partsrequest@smallappliance.com for assistance.

KRUPS

EXPRESSO MAKER
EXPRESSERIA AUTOMATIC

XP900050

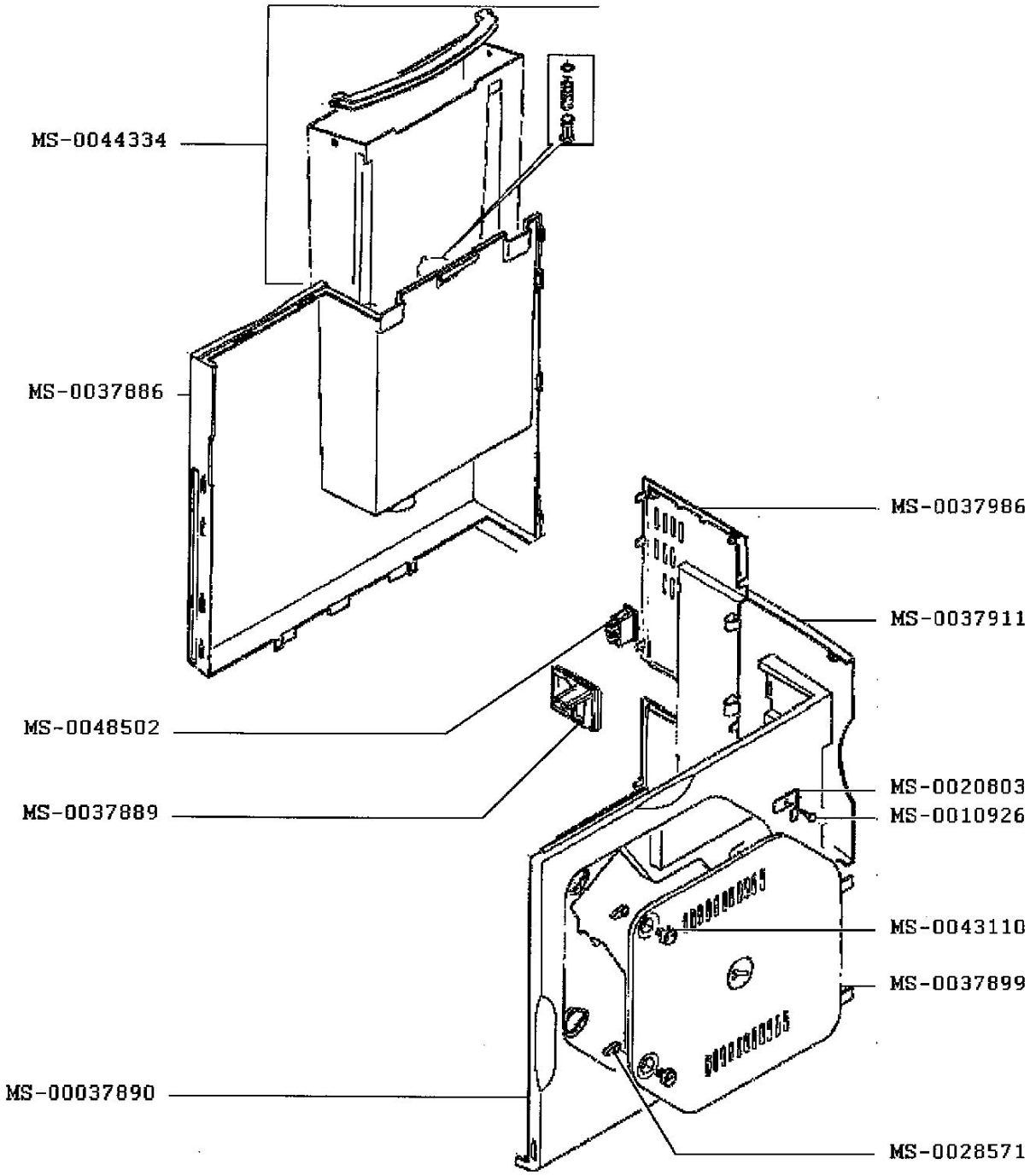

CREATION	7/2/2007	PAGE	COUNTRY	FAMILY
EDIT	7/7/2008	5/8	US	II

This Exploded Drawing is for Informational Purposes Only. No Technical Support or Installation Instructions are Available.
If you do not see the part you are looking for on our website, please email partsrequest@smallappliance.com for assistance.

KRUPS

EXPRESSO MAKER
EXPRESSERIA AUTOMATIC

XP900050

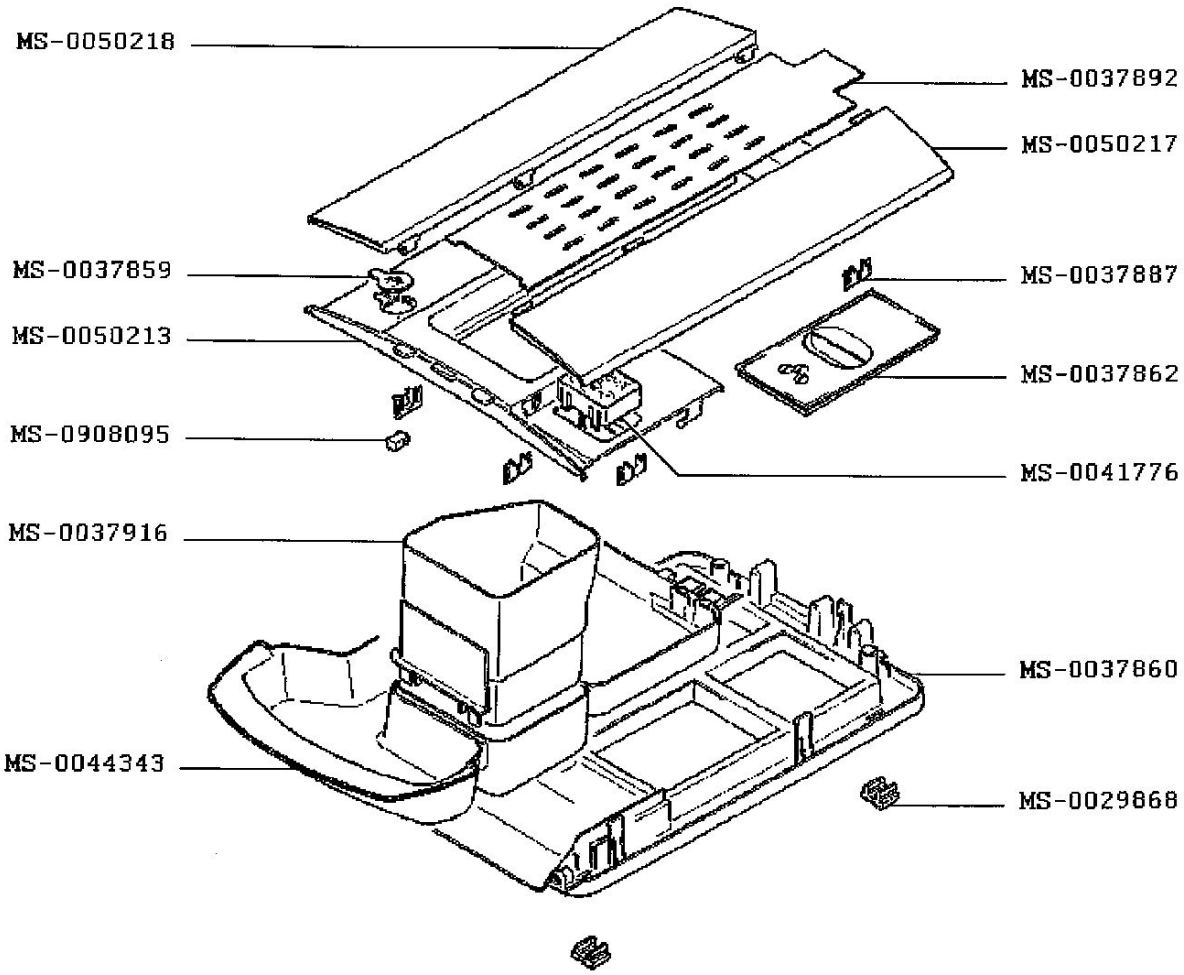

CREATION	7/2/2007	PAGE	COUNTRY	FAMILY
EDIT	7/7/2008	6/8	US	II

This Exploded Drawing is for Informational Purposes Only. No Technical Support or Installation Instructions are Available.
If you do not see the part you are looking for on our website, please email partsrequest@smallappliance.com for assistance.

KRUPS

EXPRESSO MAKER
EXPRESSERIA AUTOMATIC

XP900050

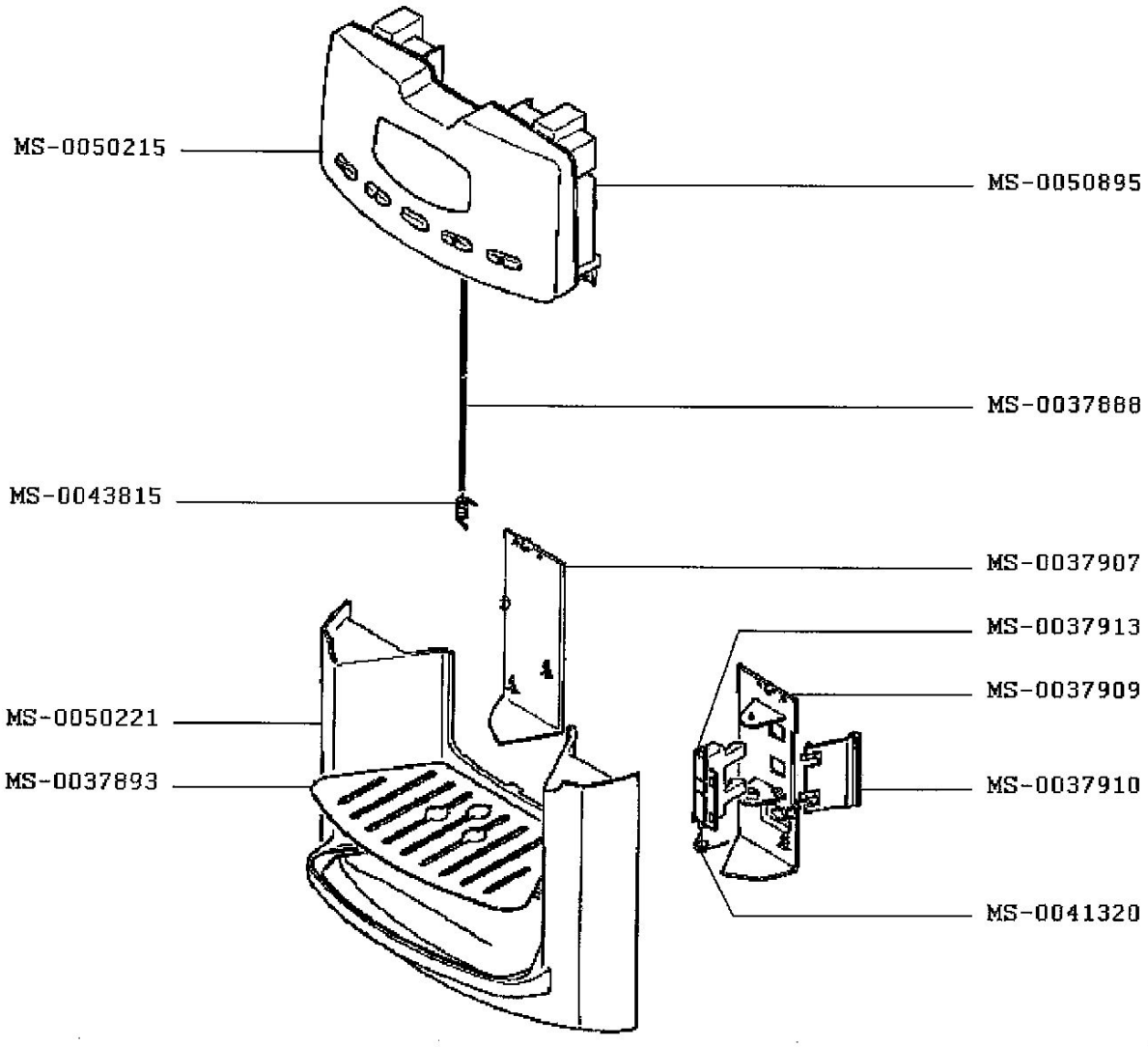

CREATION	7/2/2007	PAGE	COUNTRY	FAMILY
EDIT	7/7/2008	7/8	US	II

This Exploded Drawing is for Informational Purposes Only. No Technical Support or Installation Instructions are Available.
If you do not see the part you are looking for on our website, please email partsrequest@smallappliance.com for assistance.

KRUPS

EXPRESSO MAKER
EXPRESSERIA AUTOMATIC

XP900050

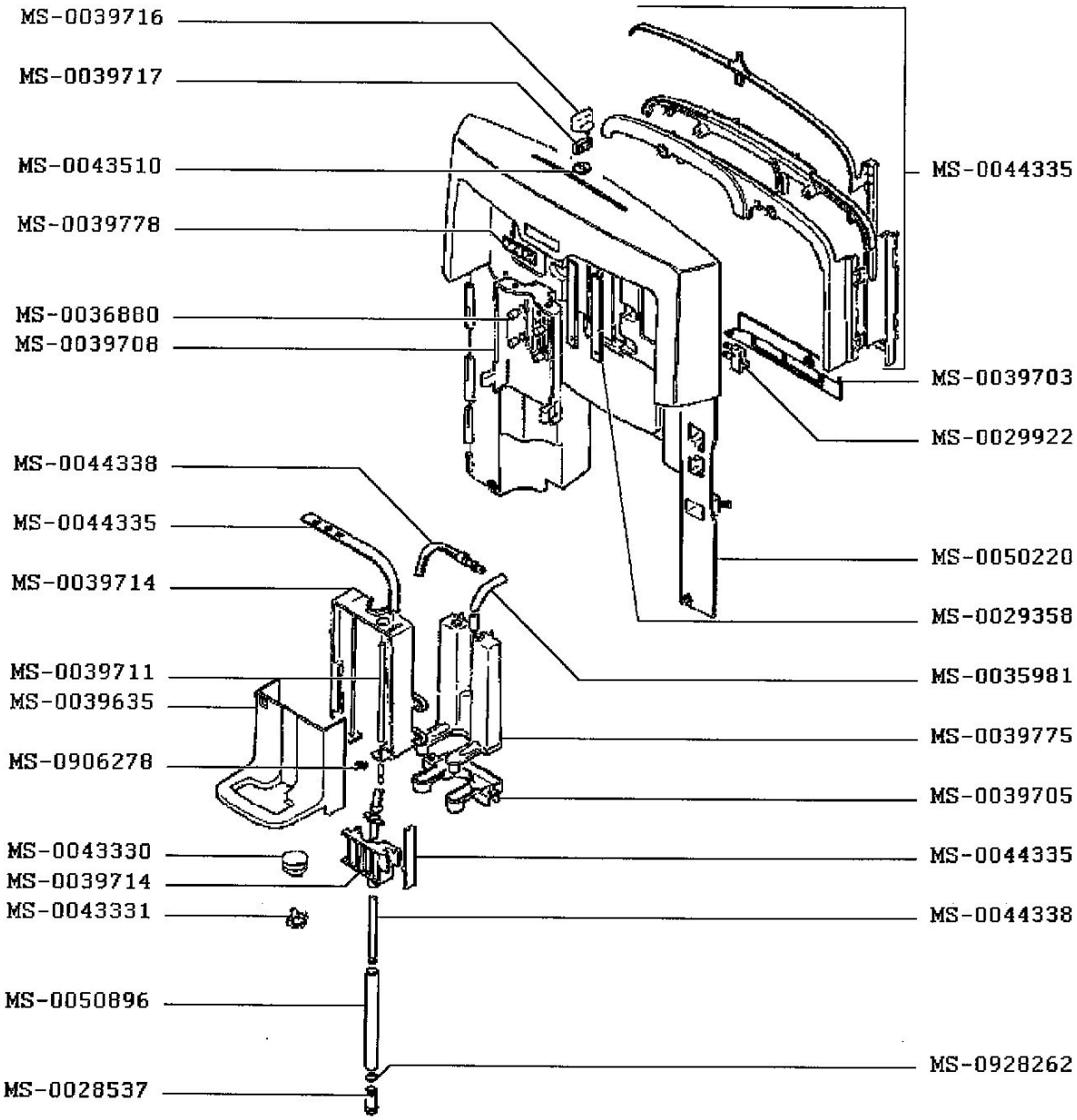

CREATION	7/2/2007	PAGE	COUNTRY	FAMILY
EDIT	7/7/2008	8/8	US	II